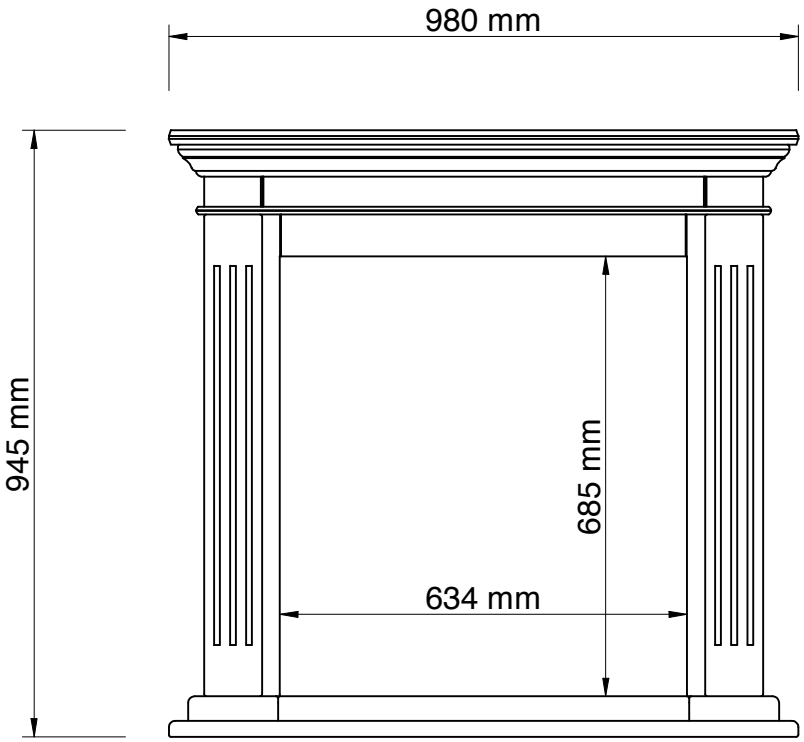

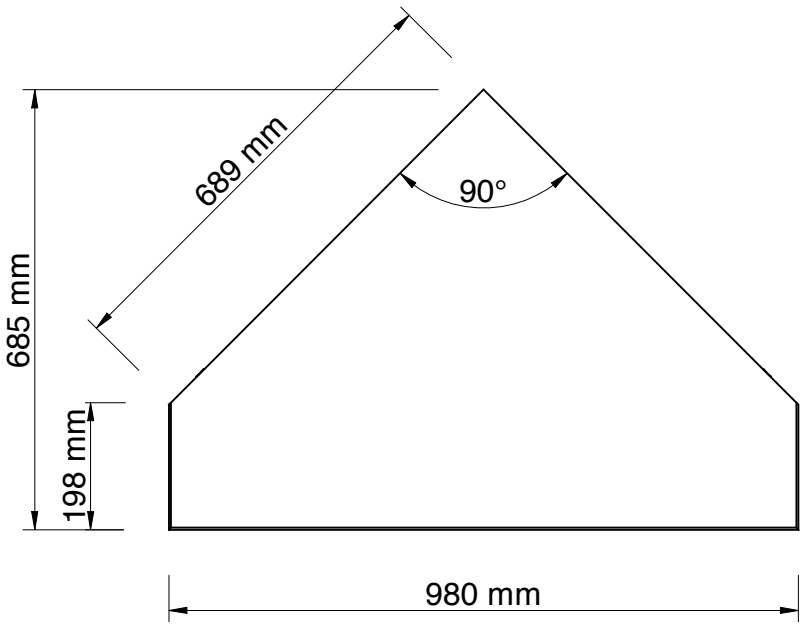

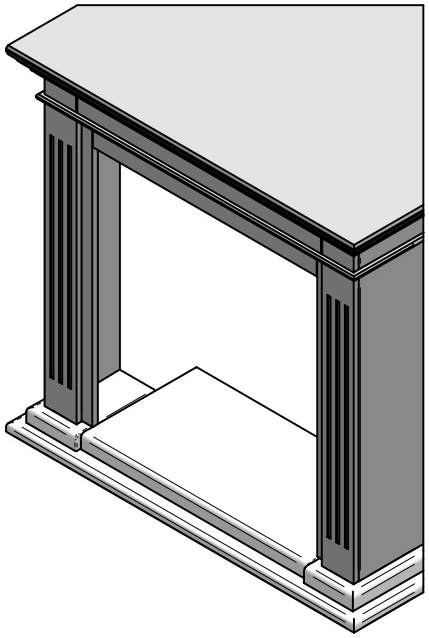

RUBYFIRES® | *Title* **Cadiz Corner**