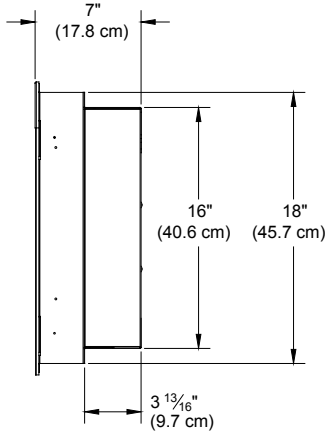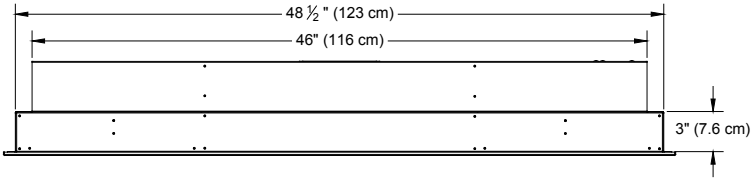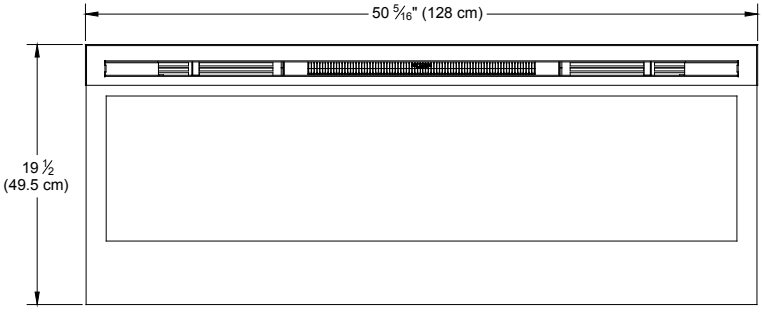Dimensional Drawing Prism 50" (Optiflame)